LID

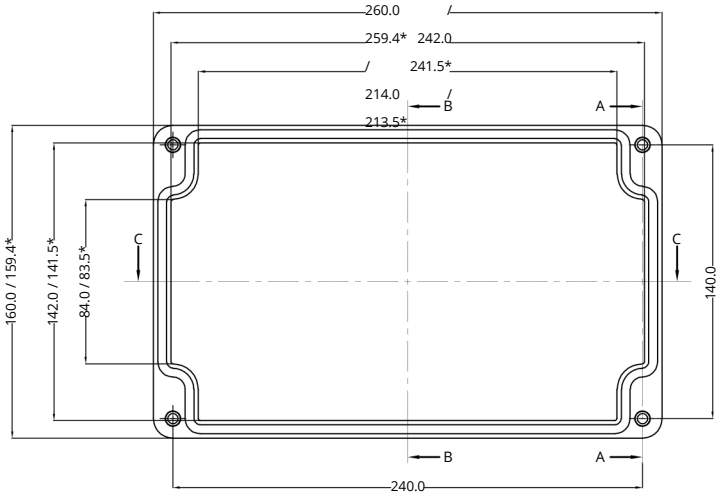

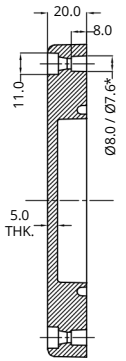

SECTION A-A

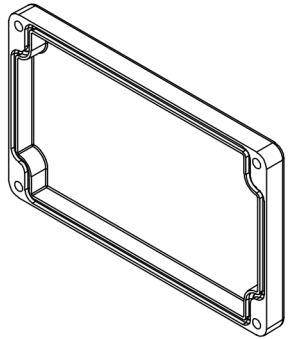

BASE

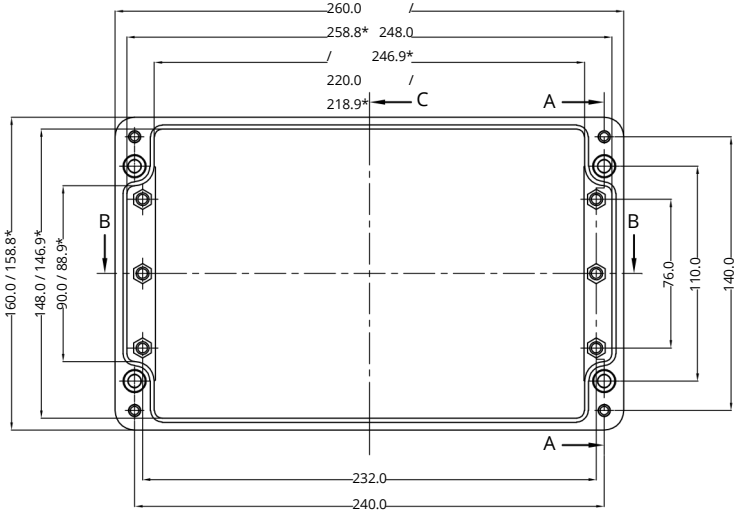

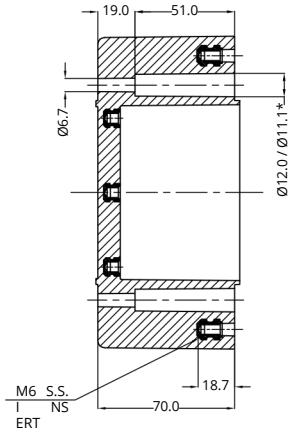

SECTION A-A

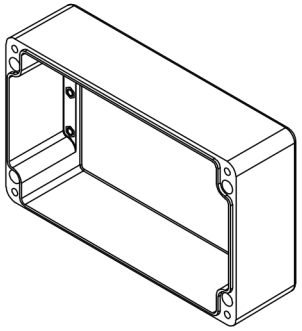

*=Conical form tapering downwords
Free dimensions-tolerance to DIN 16901-140

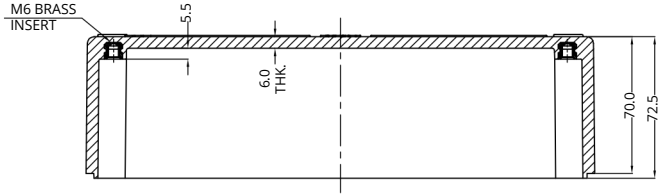

SECTION B-B

Material:-	TITLE :- GBP Polyestergehäuse GRP ENCLOSURE 260 x 160 x 90	This drawing and any information or descriptive material set out on it are the confidential property of Company Name and MUST NOT BE DISCLOSED, COPIED in whole or part or used for any purpose without the written permission of Company Name.
Finish:-		
General Tolerances DIN ISO - Linear Tol.: , Angular Tol.:- Surface Finish: All Dimensions: mm		DRAWN BY: HK — DATE: 2 2/ 4/ 22
		CHECKEDBY: DN — DATE: 2 2/ 4/ 22

Description	Rev.	Date

FIRST ANGLE PROJECTION

DO NOT SCALE

Moltkestraße 55-57
32257 Bünde
Tel: +49 (0) 5223 / 819 60 -55
Fax: +49 (0) 5223 / 819 60 -56

CODE:

DRG. NO. GBP026016090 — REV 00

SHEET 1 OF 1