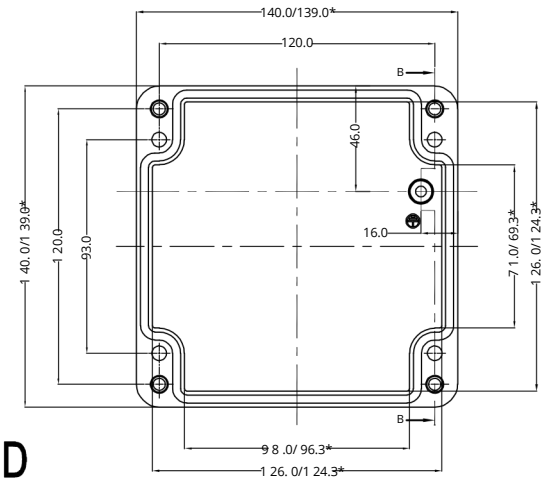

LID

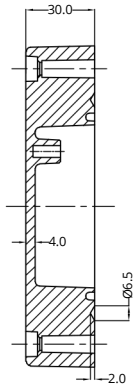

SECTION B-B

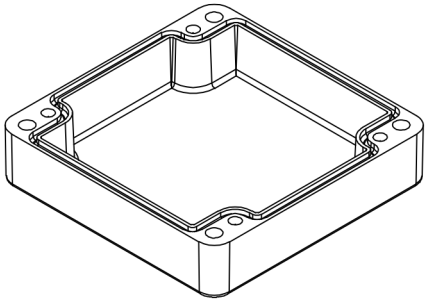

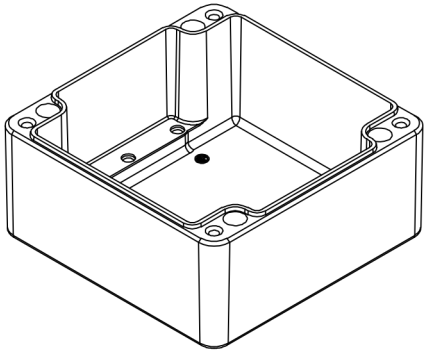

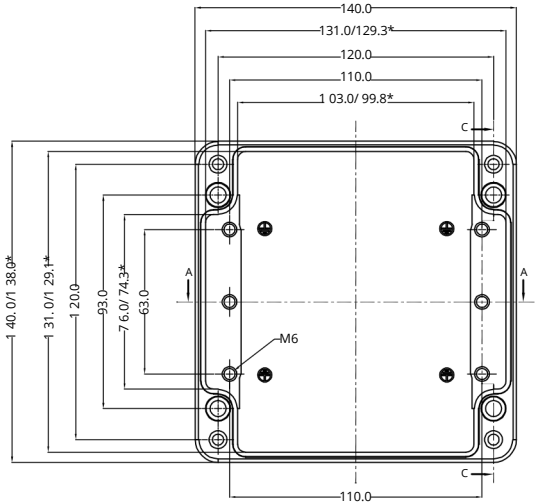

BASE

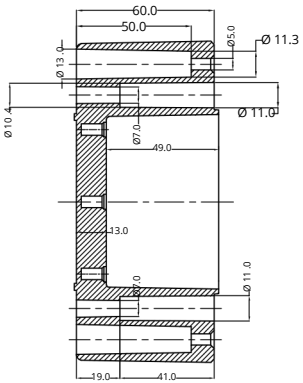

SECTION C-C

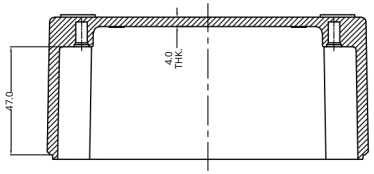

SECTION A-A

*=Conical form tapering downwords
Free dimensions-tolerance to GTA 13/5DIN 1688

Material:- A ISi12 Natural /	TITLE :- GBA Aluminiumgehäuse ALUMINIUM ENCLOSURE 140 X 140 X 91	This drawing and any information or descriptive material set out on it are the confidential property of Company Name and MUST NOT BE DISCLOSED, COPIED in whole or part or used for any purpose without the written permission of Company Name.	
Finish:- RAL 7001 Grey			DATE
General Tolerances DIN ISO - Linear Tol.: , Angular Tol.:- Surface Finish: All Dimensions: mm		DRAWN BY: HK	22/4/22
		CHECKED BY: DN	22/4/22
		CODE:	
FIRST ANGLE PROJECTION DO NOT SCALE	Moltkestraße 55-57 32257 Bünde Tel: +49 (0) 5223 / 819 60 -55 Fax: +49 (0) 5223 / 819 60 -56	DRG. NO. GBA014014091	REV 00
		SHEET 1 OF 1	

Description	Rev.	Date